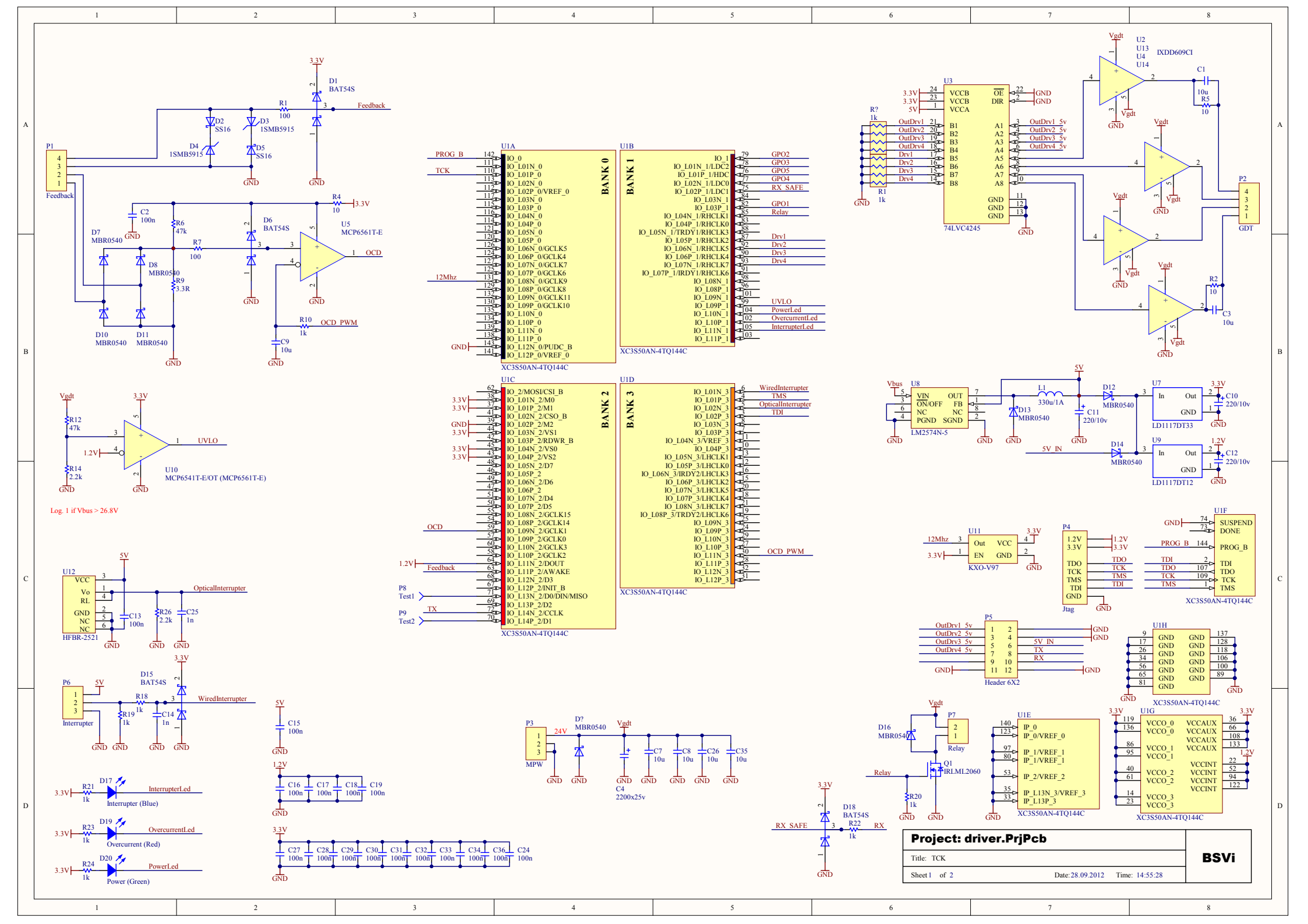

Project: driver.PrjPcb
Title: TCK
Sheet 1 of 2
Date: 28.09.2012
Time: 14:55:28
BSVi
U1A
BANK 0
XC3S50AN-4TQ144C
U1B
BANK 1
XC3S50AN-4TQ144C
U1C
BANK 2
XC3S50AN-4TQ144C
U1D
BANK 3
XC3S50AN-4TQ144C
U3
74LVC4245
U2
U13
U4
U14
IXDD609CI
U5
MCP6561T-E
U10
MCP6541T-E/OT (MCP6561T-E)
Log. 1 if Vbus > 26.8V
U8
LM2574N-5
U7
LD1117DT33
U9
LD1117DT12
U11
KXO-V97
U12
HFBR-2521
U1F
XC3S50AN-4TQ144C
U1H
XC3S50AN-4TQ144C
U1G
XC3S50AN-4TQ144C
U1E
XC3S50AN-4TQ144C
P1
Feedback
P2
GDT
P3
MPW
P4
Jtag
P5
Header 6X2
P6
Interrupter
P7
Relay
P8
Test1
P9
Test2
D1
BAT54S
D2
SS16
D3
1SMB5915
D4
1SMB5915
D5
SS16
D6
BAT54S
D7
MBR0540
D8
MBR0540
D10
MBR0540
D11
MBR0540
D12
MBR0540
D13
MBR0540
D14
MBR0540
D15
BAT54S
D16
MBR0540
D17
Interrupter (Blue)
D18
BAT54S
D19
Overcurrent (Red)
D20
Power (Green)
Q1
IRLML2060
C4
2200x25v