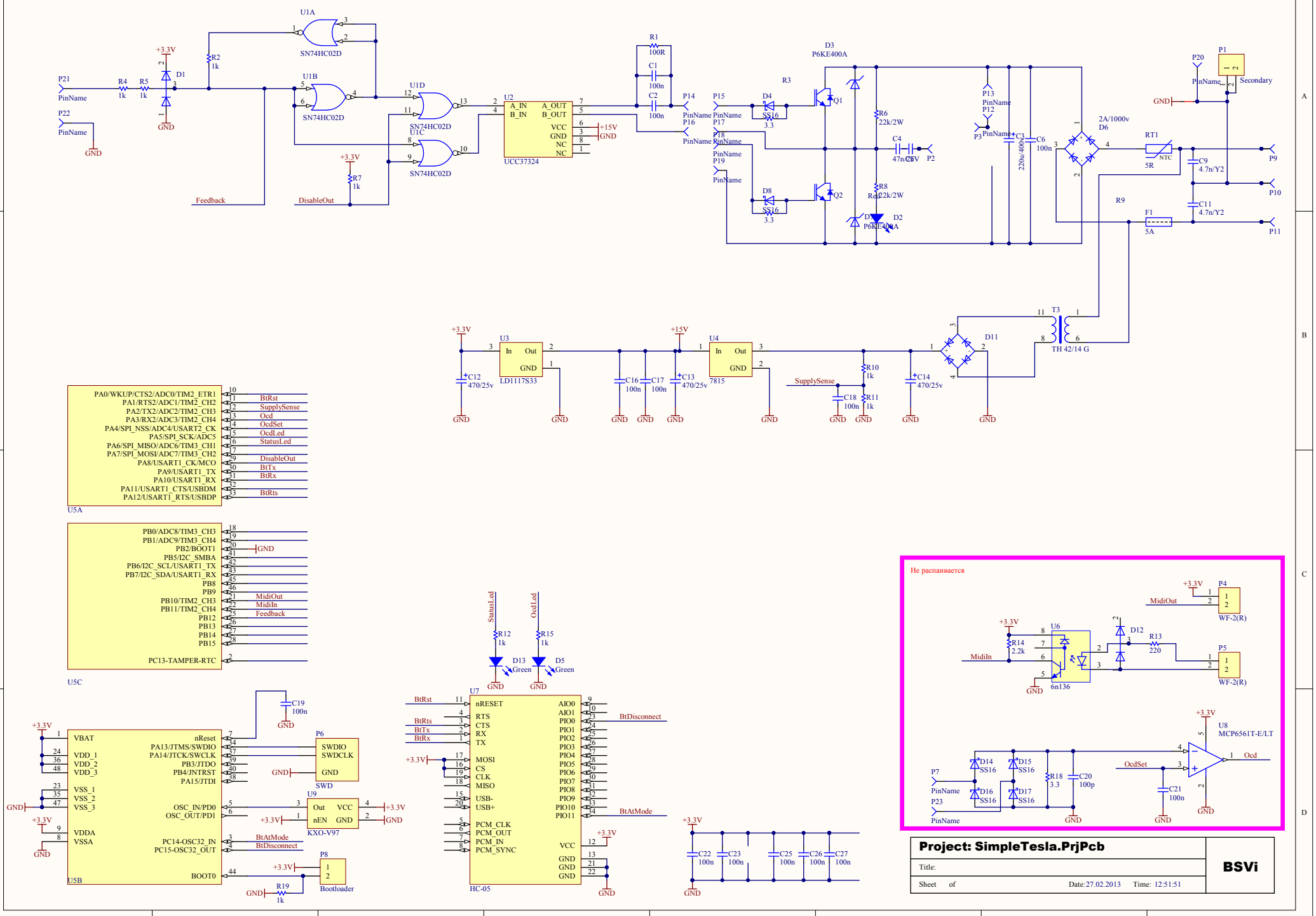

U1A
SN74HC02D
U1B
SN74HC02D
U1D
SN74HC02D
U1C
SN74HC02D
U2
UCC37324
A_IN
B_IN
A_OUT
B_OUT
VCC
GND
NC
NC
+15V
GND
+3.3V
R1
100R
C1
100n
C2
100n
P14
PinName
P16
PinName
P15
PinName
P17
PinName
P18
PinName
P19
PinName
D3
P6KE400A
D4
SS16
3.3
D8
SS16
3.3
R3
Q1
Q2
R6
22k/2W
R8
22k/2W
C4
47n/25V
P2
D1
D2
P6KE400A
P13
PinName
P12
PinName
P3
C3
220u/400v
C6
100n
2A/1000v
D6
RT1
NTC
5R
C9
4.7n/Y2
C11
4.7n/Y2
R9
F1
5A
P1
Secondary
P20
PinName
P9
P10
P11
T3
TH 42/14 G
D11
U3
LD1117S33
In
Out
GND
C12
470/25v
C16
100n
C17
100n
C13
470/25v
U4
7815
SupplySense
R10
1k
R11
1k
C18
100n
C14
470/25v
P21
PinName
P22
PinName
R4
1k
R5
1k
D1
R2
1k
R7
1k
Feedback
DisableOut
PA0/WKUP/CTS2/ADC0/TIM2_ETR1
PA1/RTS2/ADC1/TIM2_CH2
PA2/TX2/ADC2/TIM2_CH3
PA3/RX2/ADC3/TIM2_CH4
PA4/SPI_NSS/ADC4/USART2_CK
PA5/SPI_SCK/ADC5
PA6/SPI_MISO/ADC6/TIM3_CH1
PA7/SPI_MOSI/ADC7/TIM3_CH2
PA8/USART1_CK/MCO
PA9/USART1_TX
PA10/USART1_RX
PA11/USART1_CTS/USBDM
PA12/USART1_RTS/USBDP
BtRst
SupplySense
Ocd
OcdSet
OcdLed
StatusLed
DisableOut
BtTx
BtRx
BtRts
U5A
PB0/ADC8/TIM3_CH3
PB1/ADC9/TIM3_CH4
PB2/BOOT1
PB5/I2C_SMBA
PB6/I2C_SCL/USART1_TX
PB7/I2C_SDA/USART1_RX
PB8
PB9
PB10/TIM2_CH3
PB11/TIM2_CH4
PB12
PB13
PB14
PB15
PC13-TAMPER-RTC
MidiOut
MidiIn
Feedback
U5C
VBAT
VDD_1
VDD_2
VDD_3
VSS_1
VSS_2
VSS_3
VDDA
VSSA
nReset
PA13/JTMS/SWDIO
PA14/JTCK/SWCLK
PB3/JTDO
PB4/JNTRST
PA15/JTDI
OSC_IN/PD0
OSC_OUT/PD1
PC14-OSC32_IN
PC15-OSC32_OUT
BOOT0
U5B
C19
100n
P6
SWDIO
SWDCLK
GND
SWD
U9
Out
VCC
nEN
GND
KXO-V97
BtAtMode
BtDisconnect
P8
Bootloader
R19
1k
StatusLed
OcdLed
R12
1k
R15
1k
D13
Green
D5
Green
U7
nRESET
RTS
CTS
RX
TX
MOSI
CS
CLK
MISO
USB-
USB+
PCM_CLK
PCM_OUT
PCM_IN
PCM_SYNC
AIO0
AIO1
PIO0
PIO1
PIO2
PIO3
PIO4
PIO5
PIO6
PIO7
PIO8
PIO9
PIO10
PIO11
VCC
GND
GND
GND
HC-05
BtDisconnect
BtAtMode
C22
100n
C23
100n
C25
100n
C26
100n
C27
100n
Не распаивается
P4
WF-2(R)
MidiOut
U6
6n136
R14
2.2k
D12
R13
220
P5
WF-2(R)
MidiIn
U8
MCP6561T-E/LT
Ocd
OcdSet
P7
PinName
P23
PinName
D14
SS16
D15
SS16
D16
SS16
D17
SS16
R18
3.3
C20
100p
C21
100n
Project: SimpleTesla.PrjPcb
Title:
Sheet of
Date:27.02.2013
Time: 12:51:51
BSVi